This drawing contains confidential proprietary information of Triple C, Inc. and is subject to return upon request. The furnishing of this drawing is not to be construed as the grant of any license, express or implied, to manufacture, have manufactured, use or sell the structures shown hereon.

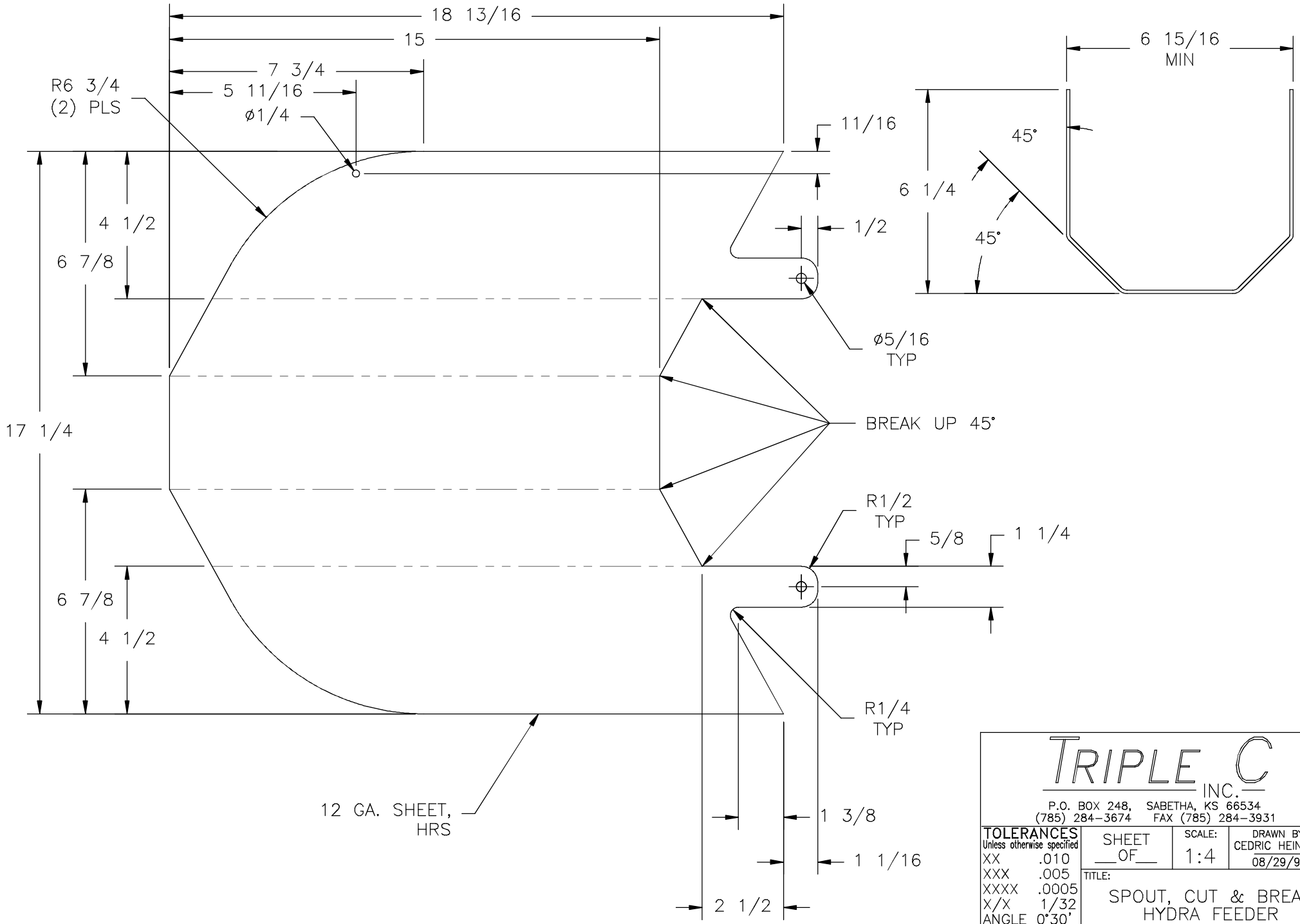

TRIPLE C INC.

P.O. BOX 248, SABETHA, KS 66534
(785) 284-3674 FAX (785) 284-3931

TOLERANCES Unless otherwise specified	SHEET	SCALE:	DRAWN BY:
XX .010 XXX .005 XXXX .0005 X/X 1/32 ANGLE 0°30'	___OF___	1:4	CEDRIC HEINIGER 08/29/95

TITLE: SPOUT, CUT & BREAK HYDRA FEEDER

ASSEMBLY NUMBER:	DRAWING NUMBER:	REV
HF12-11	30-2205	D

01/10/06